Łukasiewicz
Instytut Metali
Nieżelaznych

Development of the innovative technology of non-ferrous metals enrichment by using the pre-concentration system based on the artificial intelligence algorhitms

Author: PhD Waldemar Mijał

Lisbon, 2023

Łukasiewicz
Instytut Metali
Nieżelaznych

Agenda

1. Main aim of project
2. Research material characteristic & separation act
3. Preconcentration results for Zn-Pb ore
4. Preconcentration results for Cu ore
5. Flotation tests before & after sorting preconcentration

Main aim of the project

The aim of the project is related to developing an innovative technology for pre-concentration of a selected raw material using a sorting machine which is extended with a hybrid analysis system and using artificial intelligence algorithms, as well as implementing this technology in industrial applications.

Tasks where Ł-IMN was included:

Task 7 - Developing the enrichment technology for non-ferrous metal ores using the sorting process,

Task 9 - Demonstration of the prototype enrichment technology for the selected minerals using the sorting process,

Research material characteristic

Zn-Pb ore – from Sweden

Grain size – 15-45 mm

Zn content – 8,42 %

Pb content – 1,36 %

Fe content – 4,14 %

Cu ore – from Poland

Grain size – 15-40 & 40+ mm

Cu content - ~ 1,3-1,4 % (15-40 mm)

~ 1,0-1,2 % (40+ mm)

Separation act

What see human eye?

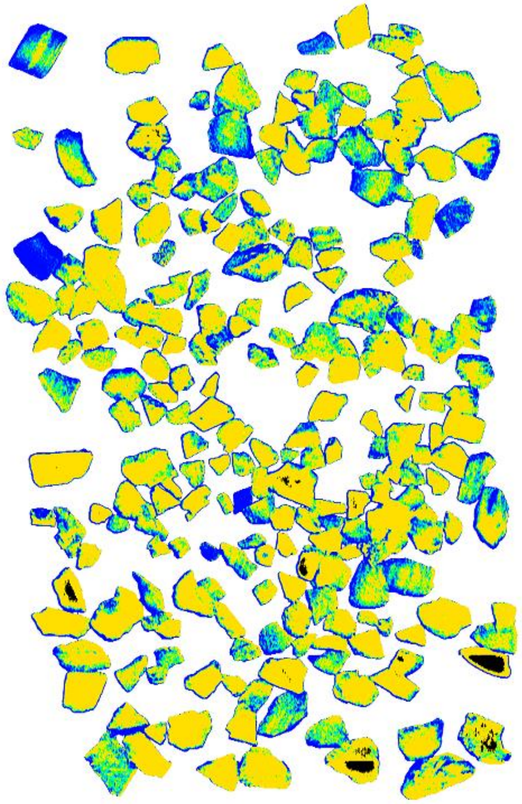

Concentrate

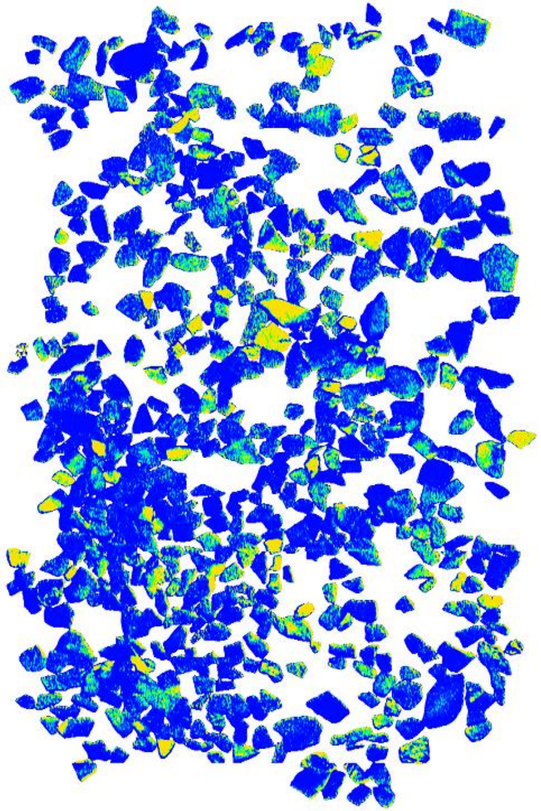

Tailing

Preconcentration results for Zn-Pb ore

Stage 7 – total amount of tests 9

Used sensors: RGB, **XRT**, neural network

Table 1. Results of sorting Zn-Pb ore for test number 9.

Product	Y, [%]	β_{Zn}, [%]	ε_{Zn}, [%]	β_{Pb}, [%]	ε_{Pb}, [%]	β_{Fe}, [%]	ε_{Fe}, [%]
High Density (Concentrate)	74,10	10,70	98,11	1,32	93,79	5,45	88,23
Low Density (Tailings)	**25,90**	0,59	**1,89**	0,25	**6,21**	2,08	**11,77**
Feed	100,00	**8,08**	100,00	**1,04**	100,00	**4,58**	100,00

Preconcentration results for Zn-Pb ore

Table 2. Enrichment rates for test number 9 (Zn-Pb ore).

Test	Element	β, [%]	α, [%]	K_w
9	Zn	10,70	8,08	1,32
	Pb	1,32	1,04	1,27
	Fe	5,45	4,58	1,19

$$K_w = \frac{\beta}{\alpha}$$

K_w – enrichment ratio,
β – content of metal in concentrate,
α – content of metal in feed.

Preconcentration results for Cu ore

Stage 7 – total amount of tests 12

Used sensors: RGB, XRT, neural network, **TDI+HySpex**

Table 3. Results of sorting Cu ore for test number 12.

Produkt	**γ, [%]**	**β_{Cu}, [%]**	**ε_{Cu}, [%]**
High Density (Concentrate)	84,18	1,52	99,02
Low Density (Tailing)	**15,82**	**0,08**	**0,98**
Feed	100,00	1,29	100,00

Preconcentration results for Cu ore

Table 4. Enrichment rates for test number 12 (Cu ore).

Test	Element	β, [%]	α, [%]	K_w
12	Cu	1,52	1,29	1,18

$$K_w = \frac{\beta}{\alpha}$$

K_w – enrichment ratio,
β – content of metal in concentrate,
α – content of metal in feed.

Flotation tests Zn-Pb ore

Table 5. Flotation results of Zn-Pb ore without sorting system.

Flotation product	γ, [%]	β, [%]			ε, [%]		
		Zn	Pb	Fe	Zn	Pb	Fe
Feed	***100,00***	***7,94***	***2,36***	***4,03***	***100,00***	***100,00***	***100,00***
Pb concenctrate	3,67	10,20	60,30	1,27	4,71	93,82	1,16
Pb tailing	96,33	7,86	0,15	4,13	95,29	6,18	98,84
Zn concentrate	13,59	53,80	0,22	3,41	92,06	1,27	11,51
Zn tailing	**82,74**	**0,31**	**0,14**	**4,25**	**3,23**	**4,91**	**87,33**

Table 6. Flotation results of Zn-Pb ore with sorting system.

Flotation product	γ, [%]	β, [%]			ε, [%]		
		Zn	Pb	Fe	Zn	Pb	Fe
Feed	***100,00***	***7,94***	***2,36***	***4,03***	***100,00***	***100,00***	***100,00***
Sorting tailing	17,27	0,59	0,25	2,08	1,28	1,83	8,92
Pb flotation feed	82,73	9,48	2,80	4,43	98,72	98,17	91,08
Pb concentrate	3,65	9,41	59,90	1,36	4,32	92,64	1,23
Pb tailings	79,08	9,48	0,16	4,58	94,40	5,53	89,85
Zn concentrate	13,04	55,80	0,19	3,42	91,57	1,05	11,07
Zn flotation tailings	66,05	0,34	0,16	4,80	2,83	4,48	78,78
Final tailings	**83,32**	**0,39**	**0,18**	**4,24**	**4,11**	**6,31**	**87,70**

Flotation tests Zn-Pb ore

Łukasiewicz
Instytut Metali
Nieżelaznych

tys Mg / rok	γ op,%	γ r,%
Zn%	Pb%	Fe%
εZn %	εPb %	εFe %

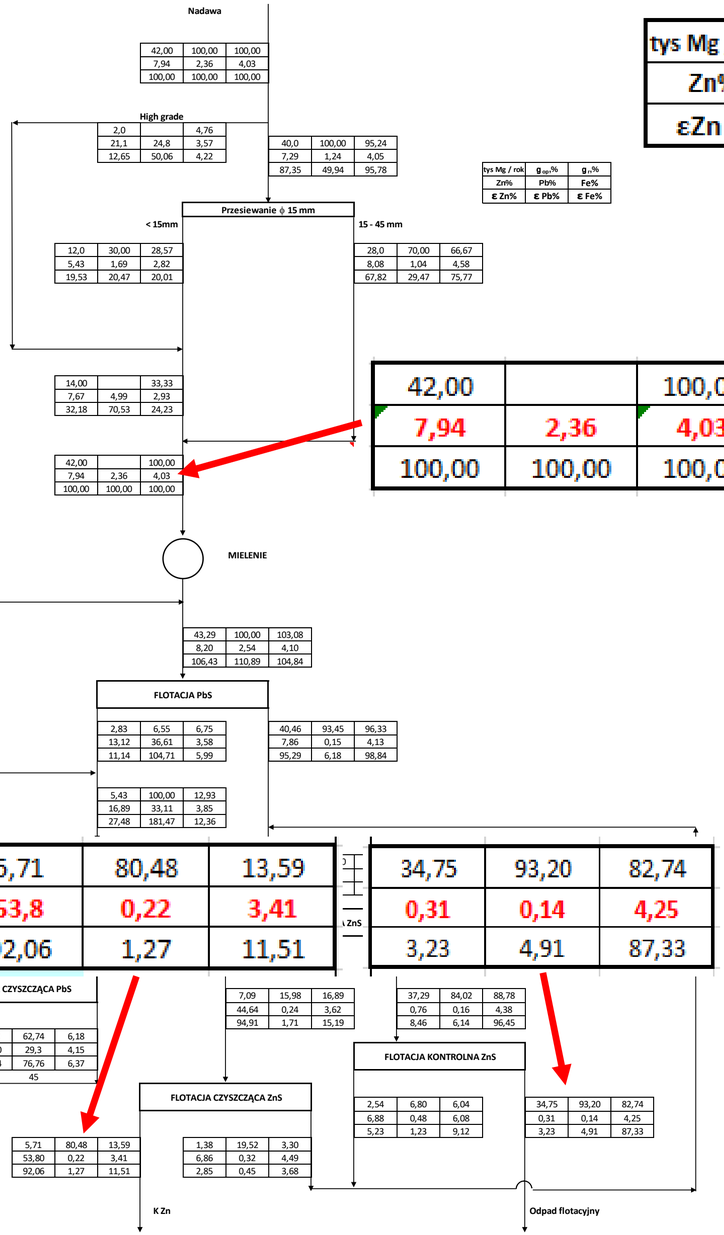

42,00		100,00
7,94	2,36	4,03
100,00	100,00	100,00

1,54	37,26	3,67
10,2	60,3	1,27
4,71	93,82	1,16

5,71	80,48	13,59
53,8	0,22	3,41
92,06	1,27	11,51

34,75	93,20	82,74
0,31	0,14	4,25
3,23	4,91	87,33

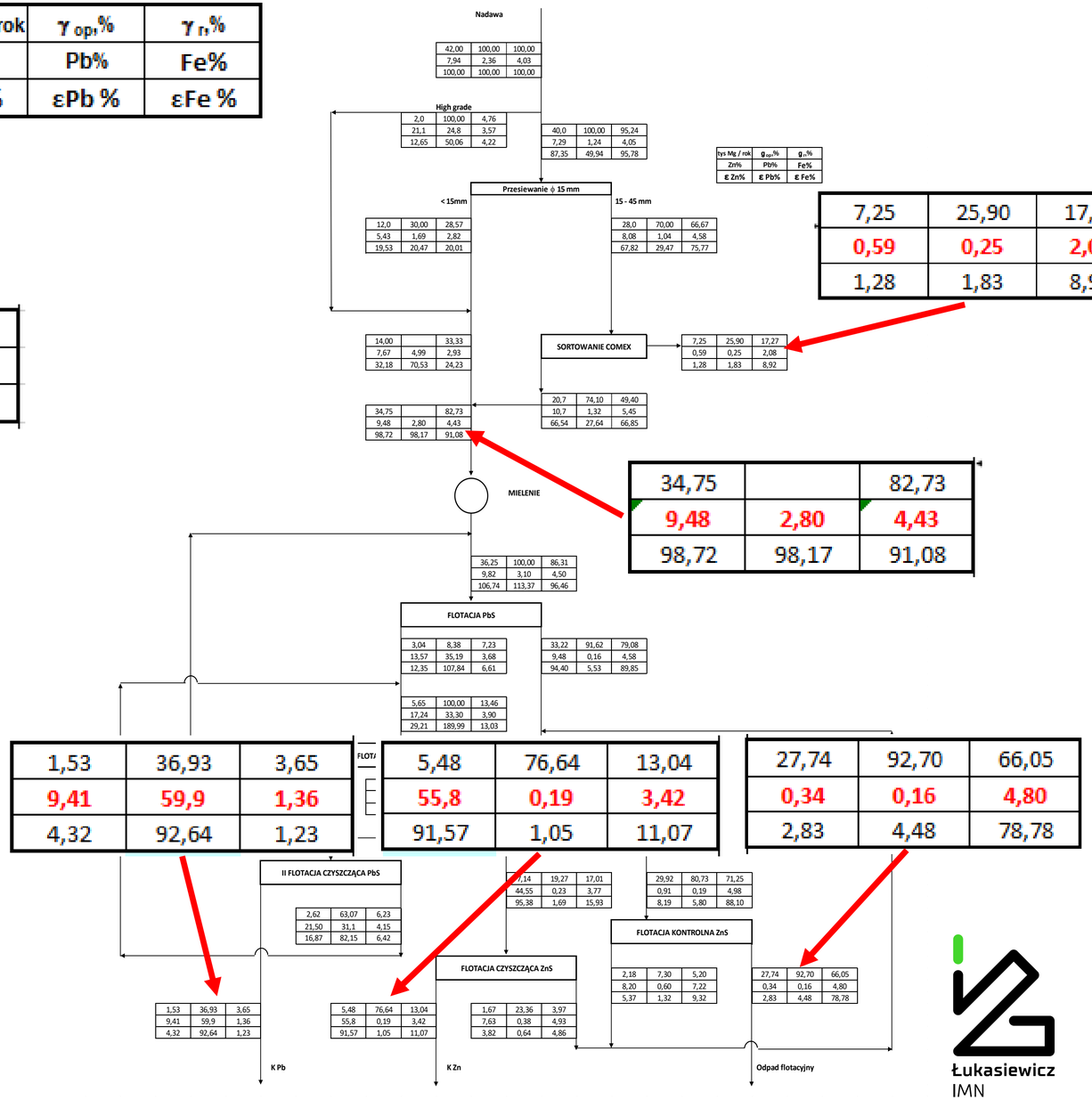

7,25	25,90	17,27
0,59	0,25	2,08
1,28	1,83	8,92

34,75		82,73
9,48	2,80	4,43
98,72	98,17	91,08

1,53	36,93	3,65
9,41	59,9	1,36
4,32	92,64	1,23

5,48	76,64	13,04
55,8	0,19	3,42
91,57	1,05	11,07

27,74	92,70	66,05
0,34	0,16	4,80
2,83	4,48	78,78

Łukasiewicz
IMN

Flotation tests Cu ore

Table 7. Flotation results of Zn-Pb ore without sorting system.

Flotation	Product	γ, [%]	β_{Cu}, [%]	ε_{Cu}, [%]
Basic test	***Feed***	100,00	1,43	100,00
	Concentrate	8,79	14,98	92,33
	Tailing	**91,21**	**0,12**	**7,67**
Test with high density product	***Feed***	100,00	1,47	100,00
	Sorting tailing	8,20	0,08	0,45
	Flotation feed	91,80	1,59	99,55
	Concentrate	8,95	15,04	91,66
	Flotation tailing	***82,85***	***0,14***	***7,90***
	Final tailings	**91,05**	**0,13**	**8,34**

Flotation tests Cu ore

Łukasiewicz
Instytut Metali Nieżelaznych

Cu%	Mg / godz.
γ_{r},%	γ_{op},%
ε_{r},%	ε_{op},%

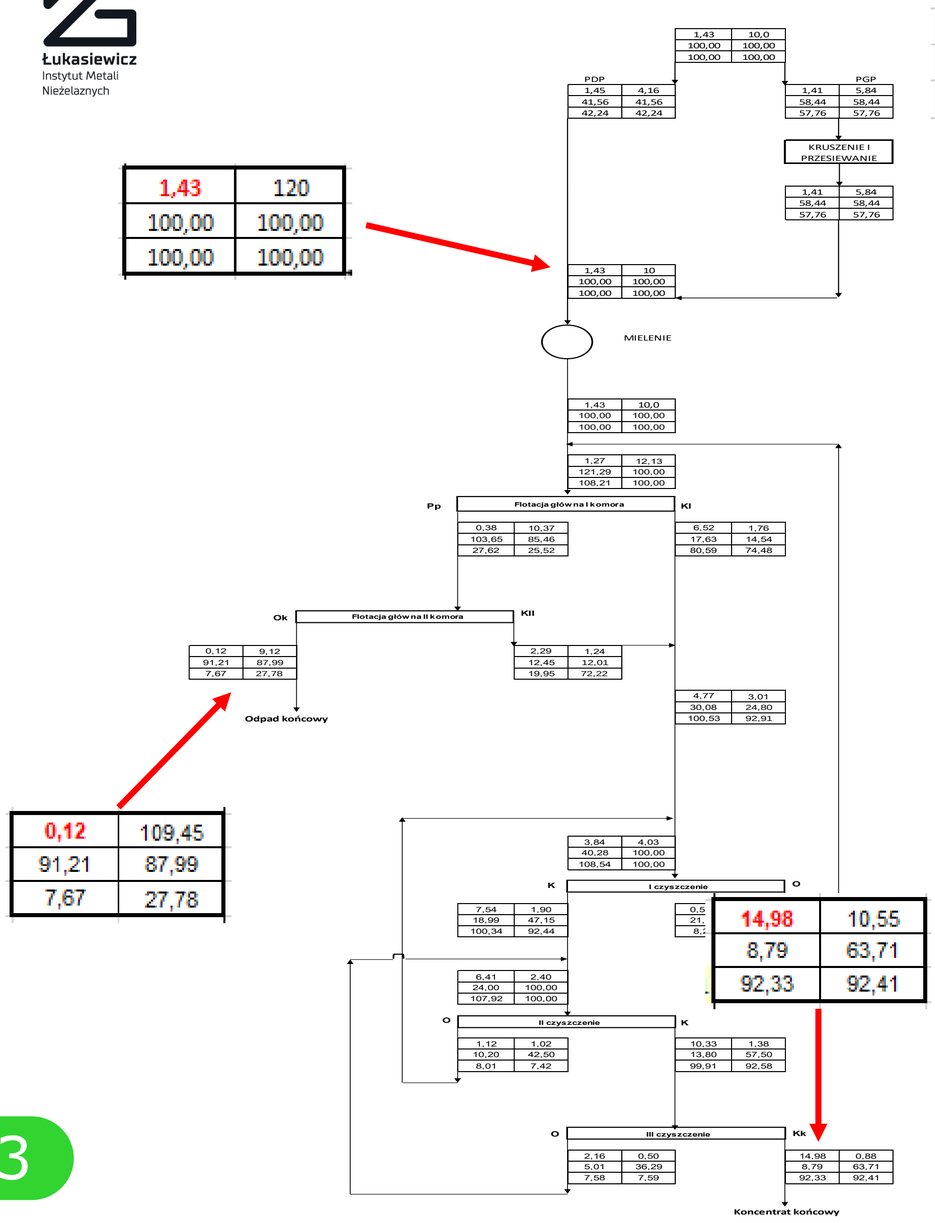

1,43	120
100,00	100,00
100,00	100,00

0,12	109,45
91,21	87,99
7,67	27,78

14,98	10,55
8,79	63,71
92,33	92,41

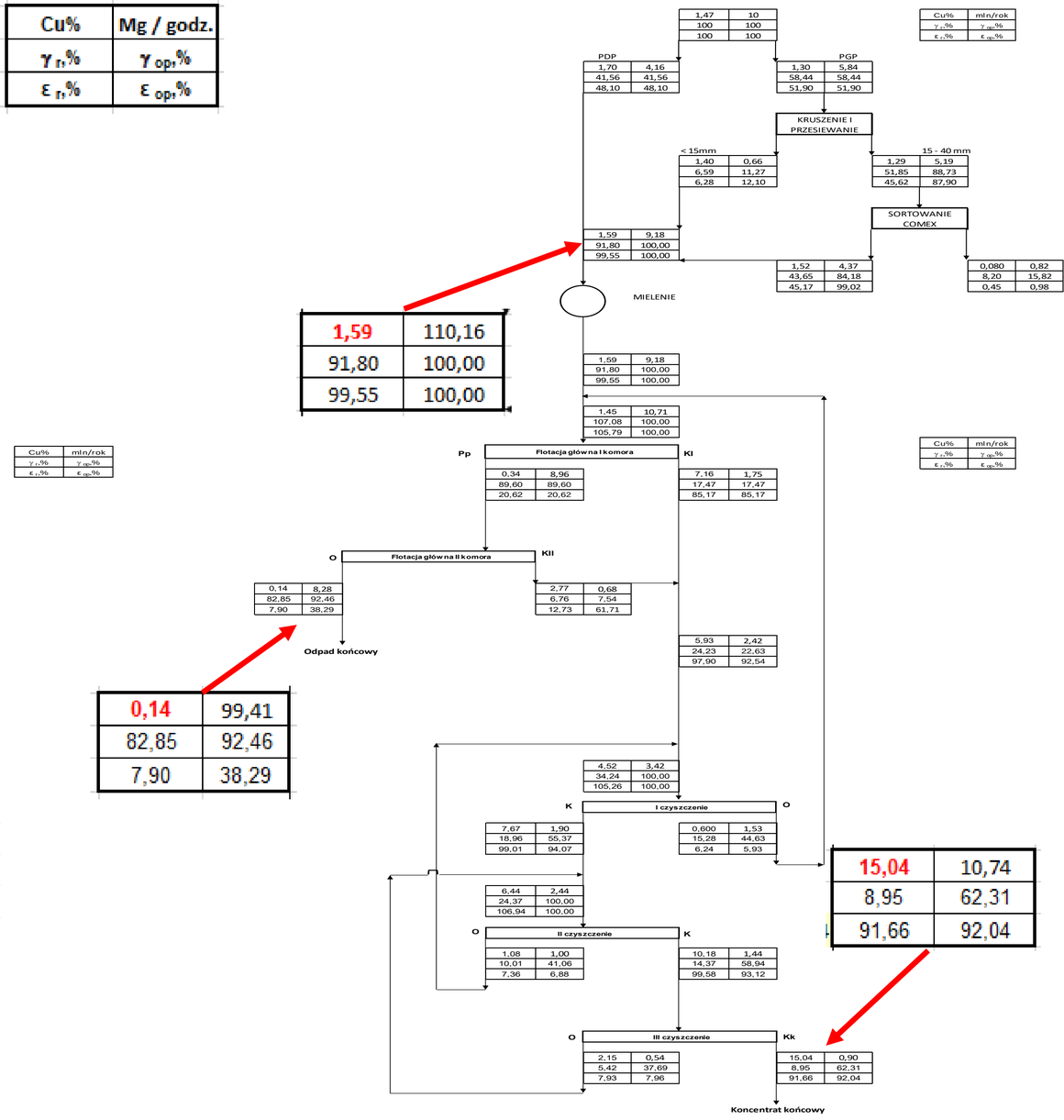

1,59	110,16
91,80	100,00
99,55	100,00

0,08	9,84
8,20	15,82
0,45	0,98

0,14	99,41
82,85	92,46
7,90	38,29

15,04	10,74
8,95	62,31
91,66	92,04

Łukasiewicz
IMN

Łukasiewicz
Instytut Metali Nieżelaznych

Center of Mineral Processing,
Łukasiewicz Research Network – Institute of Non-Ferrous Metals

Home - Instytut Metali Nieżelaznych (imn.gliwice.pl)

https://www.facebook.com/imncentrumprzerobki

Contact person:

PhD WALDEMAR MIJAŁ

Specialist, Center of Mineral Processing

E-mail:waldemar.mijal@imn.lukasiewicz.gov.pl
Phone: +48 32 238 02 46

https://www.linkedin.com/in/waldemarmijal/

Thank you for your attention!

Łukasiewicz
Sieć Badawcza