Łukasiewicz
Institute
of Non-Ferrous
Metals

LCA analysis of zinc cell recycling in Waelz kiln

Katarzyna Klejnowska, PhD

Introduction

Structure of a Zinc/Carbon Cell

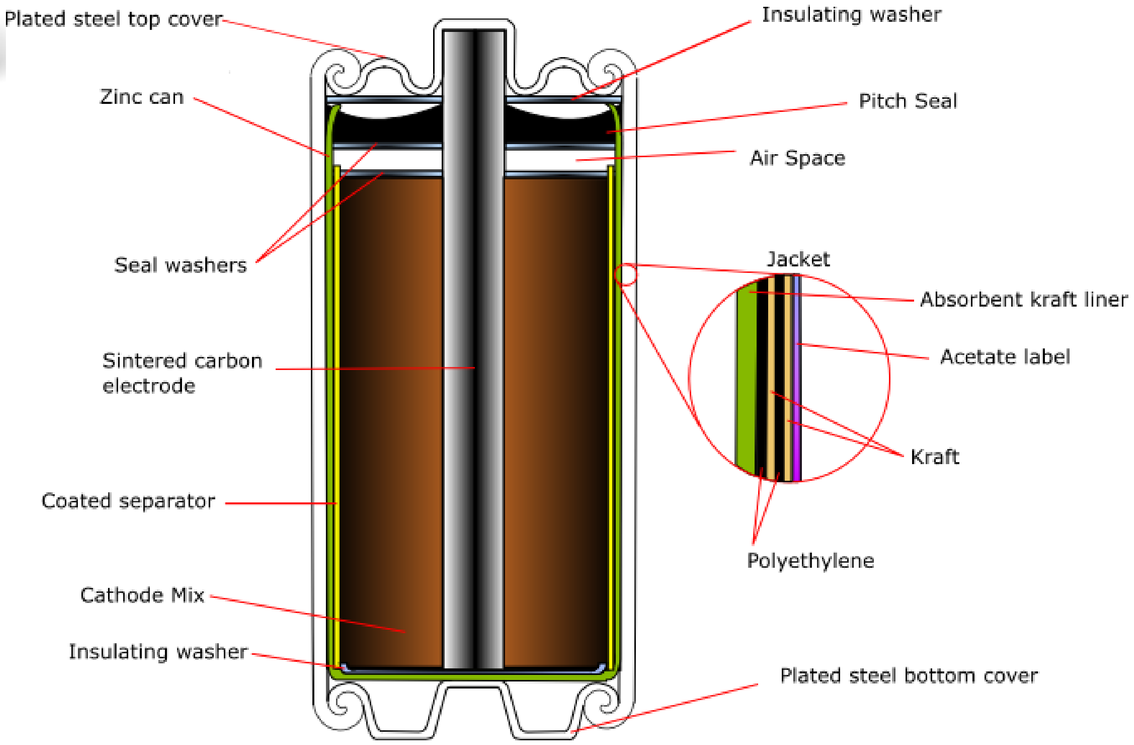

Alkaline Battery

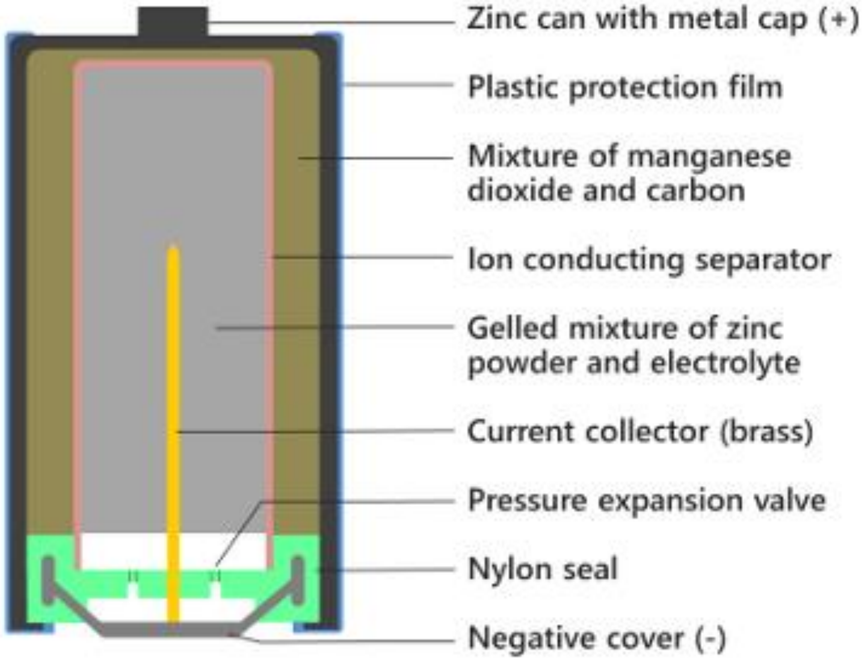

Introduction

Company	Process	Types of processed batteries	Products
BatEko	Mechanical	Zn-C Zn-MnO_2	- Ferromagnetic fraction - Diamagnetic fraction - Paramegnetic fraction
Recupyl Polska Sp. z o.o.	Mechanical	Zn-C Zn-MnO_2 Zn-Air	
Baterpol S.A.	Pyrometallurgical	Lead batteries	- Lead alloys - Solid sodium sulfate - Polypropylene
Orzeł Biały S.A.	Pyrometallurgical	Lead batteries	- Lead alloys - Granulated polypropylene
ZM Silesia S.A.	Pyrmetallurgical	Ni-Cd	- Metallic Cd - Ferroalloys containing nickel

Introduction – life cycle of a battery

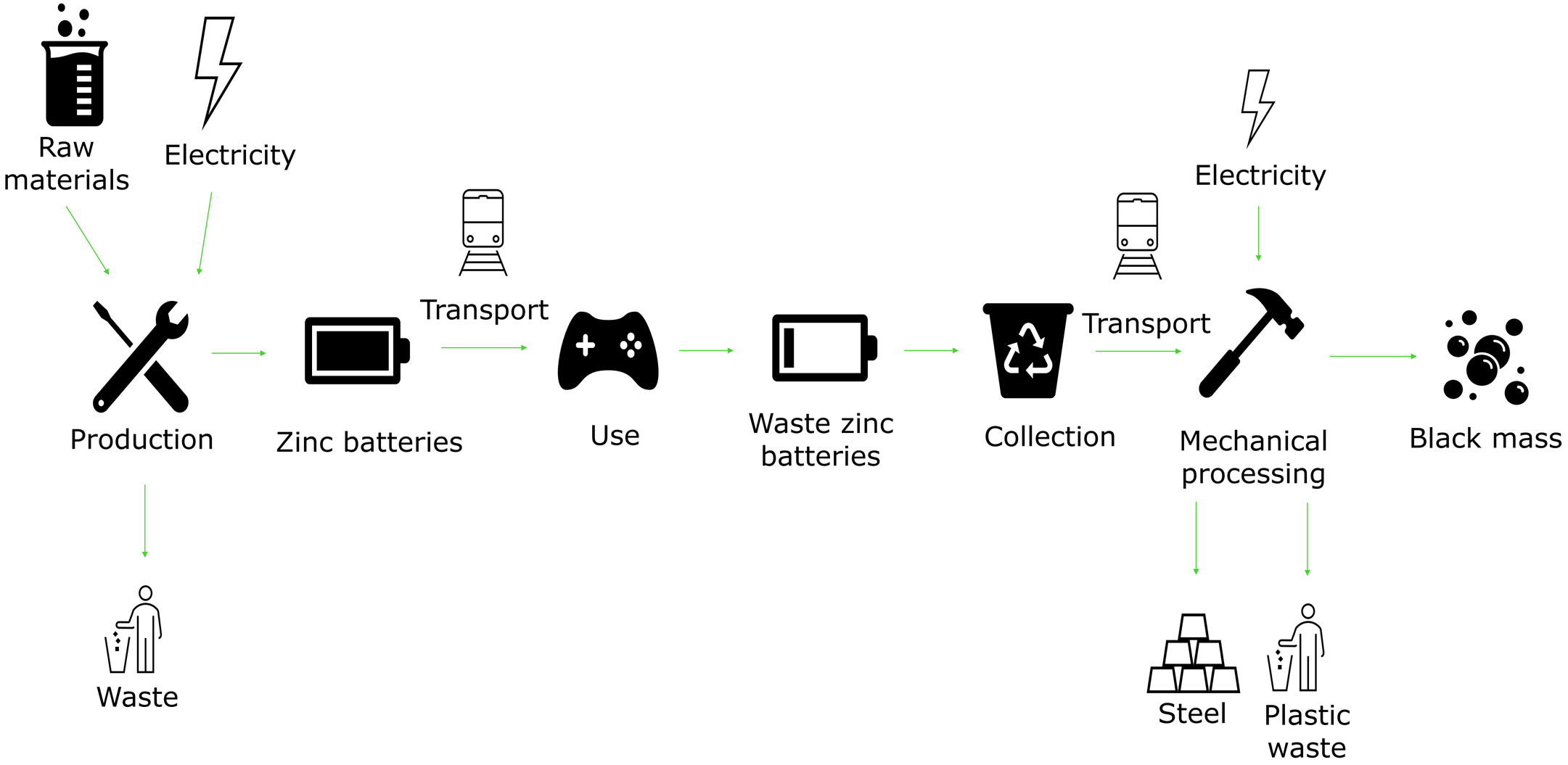

Introduction – mechanical processing

Shredder

Magnetic separator

Sieve separator

Black mass

Black mass is obtained during the mechanical processing of waste zinc-carbon and zinc-alkaline batteries. The remaining materials obtained during this process include steel and plastics.

Black mass contains manganese oxide, zinc in the form of metal, oxide and chloride, and carbon.

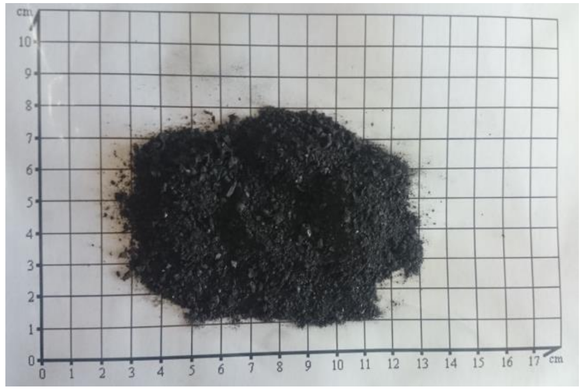

Fraction	Content
MnO_2	47,04%
ZnO	27,44%
$ZnCl_2$	5,96%
NH_4Cl	2,34%
C	8,00%
Fe	1,00%
KOH	5,02%
Ni	0,70%
Cu	0,04%
PbO	0,03%
CdO	0,07%
Hg	0,00%
S	0,40%
SiO_2	1,07%
Al_2O_3	0,66%
CaO	0,14%
MgO	0,10%

Waelz process

Laboratory scale rotary furnace

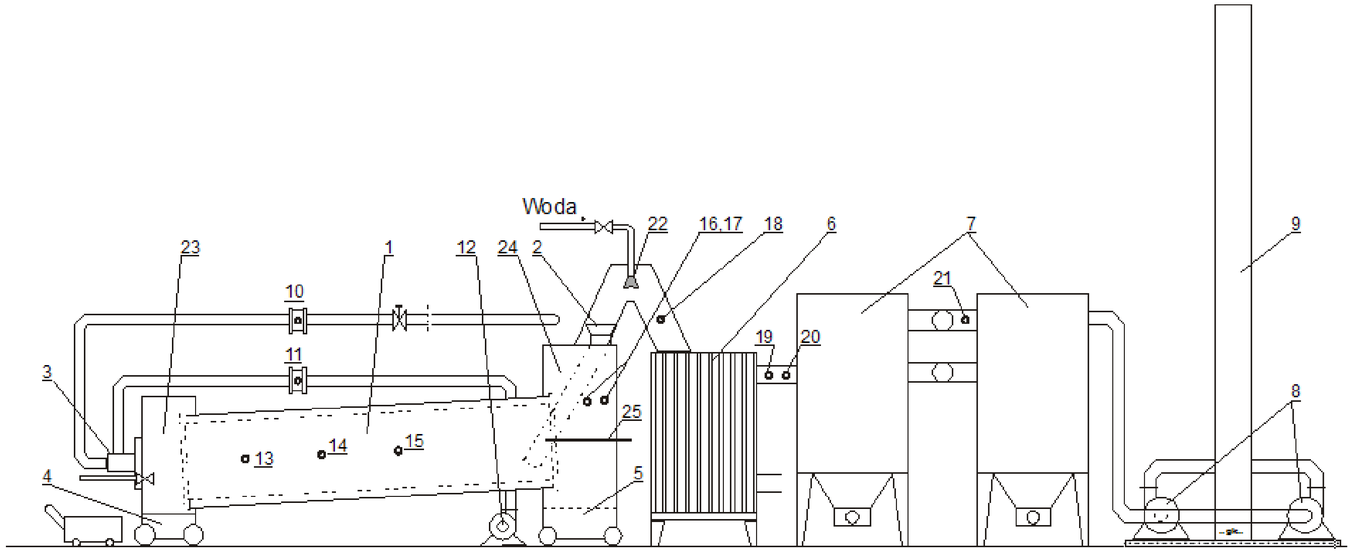

Pilot scale rotary furnace

Łukasiewicz
Institute
of Non-Ferrous
Metals

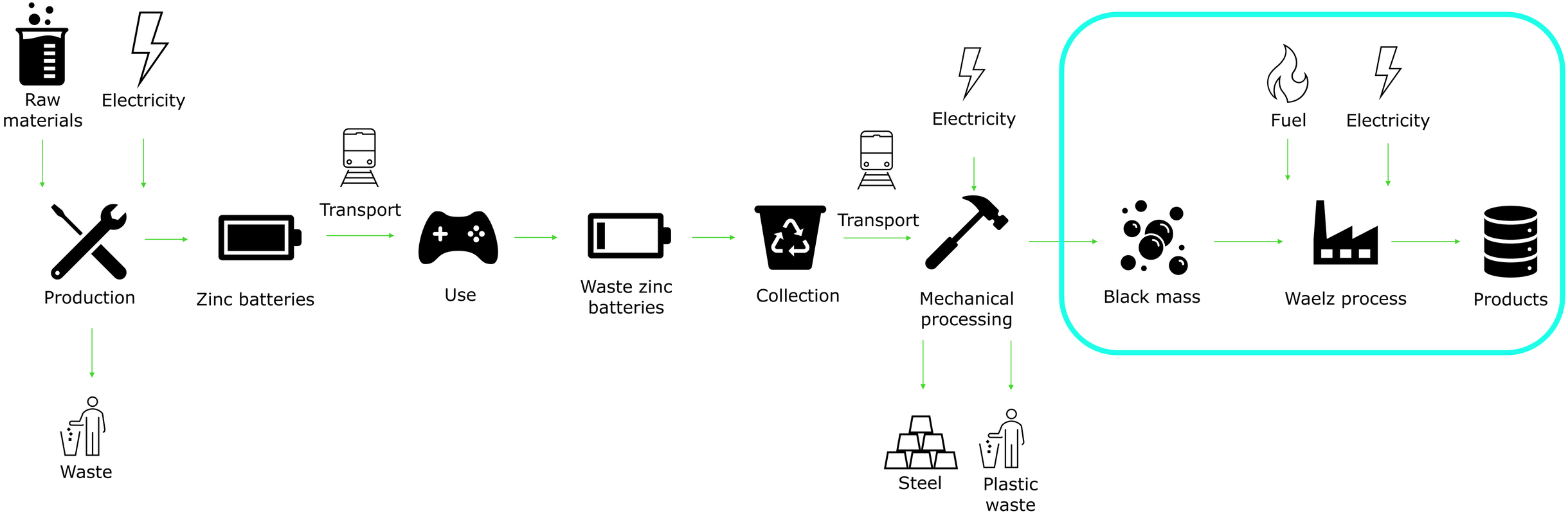

Łukasiewicz
Institute
of Non-Ferrous
Metals

Goal and scope definition

- Goal: Determination of the environmental impact of the processing of black mass obtained from waste zinc batteries in a process developed at Łukasiewicz – IMN
- Reason: identification of potential areas that require improvement for process optimization; comparison LCAs are planned as the following steps
- Functional unit: 1Mg of the processed black mass
- Software: SimaPro version 9.1.1.1
- Database: Ecoinvent 3
- Method: ReCiPe 2016 Midpoint (H)

Assumptions

- Due to the lack of information on the total natural gas consumption during the industrial scale process, this value was taken from the Łukasiewicz – IMN report regarding the processing of steelmaking dusts, which is a similar proces and the differences are negligible
- Coke consumption during the process is 20 kg/Mg of black mass. The heating value was assumed to be 30 MJ/kg
- The distance between mechanical processing facility and the location of a pyrometallurgical proces was assumed to be 860 km. This is the average of three potential sites in Germany (Relux, Bad Oeynhausen; Redux, Bremneuhaven; Redux, Offenbach) and Kędzierzyn-Koźle (the potential site of the plant)
- Electricity consumption: 150 - 200 kWh/Mg, Rütten, J.: Various Concepts for the Recycling of EAFD and Dust from Integrated Steel Mills, Vernetzung von Zink und Stahl, 2011
- Other information was collected during the tests performed at Łukasiewicz – IMN

Results – impact assessment

Łukasiewicz Institute of Non-Ferrous Metals

Impact category	Unit	Total	Mn and Zn concentrates	Natural gas	Coke	Black mass	Electricity	Transport
Global warming	kg CO2 eq	572,87	15,72	15,99	210,28	0,00	241,80	89,08
Stratospheric ozone depletion	kg CFC11 eq	0,00	0,00	0,00	0,00	0,00	0,00	0,00
Ionizing radiation	kBq Co-60 eq	5,56	0,00	0,07	2,88	0,00	0,55	2,07
Ozone formation, Human health	kg NOx eq	1,69	0,00	0,03	0,83	0,00	0,42	0,41
Fine particulate matter formation	kg PM2.5 eq	1,36	0,00	0,02	0,84	0,00	0,39	0,12
Ozone formation, Terrestrial ecosystems	kg NOx eq	1,88	0,00	0,03	1,01	0,00	0,42	0,42
Terrestrial acidification	kg SO2 eq	2,33	0,00	0,05	0,86	0,00	1,15	0,27
Freshwater eutrophication	kg P eq	0,27	0,00	0,00	0,21	0,00	0,05	0,01
Marine eutrophication	kg N eq	0,02	0,00	0,00	0,01	0,00	0,00	0,00
Terrestrial ecotoxicity	kg 1,4-DCB	2493,43	0,00	2,79	206,97	0,00	99,28	2184,39
Freshwater ecotoxicity	kg 1,4-DCB	12,24	0,00	0,05	8,01	0,00	2,55	1,63
Marine ecotoxicity	kg 1,4-DCB	17,94	0,00	0,07	11,04	0,00	3,54	3,28
Human carcinogenic toxicity	kg 1,4-DCB	23,65	0,00	0,15	14,62	0,00	7,23	1,65
Human non-carcinogenic toxicity	kg 1,4-DCB	484,57	0,00	1,08	299,39	0,00	124,01	60,09
Land use	m2a crop eq	76,69	0,00	0,14	56,71	0,00	8,08	11,76
Mineral resource scarcity	kg Cu eq	101,04	0,00	0,01	0,21	100,51	0,06	0,24
Fossil resource scarcity	kg oil eq	228,94	0,00	22,31	116,13	0,00	58,80	31,69
Water consumption	m3	1,46	0,00	0,01	0,74	0,00	0,54	0,17

Results - characterization

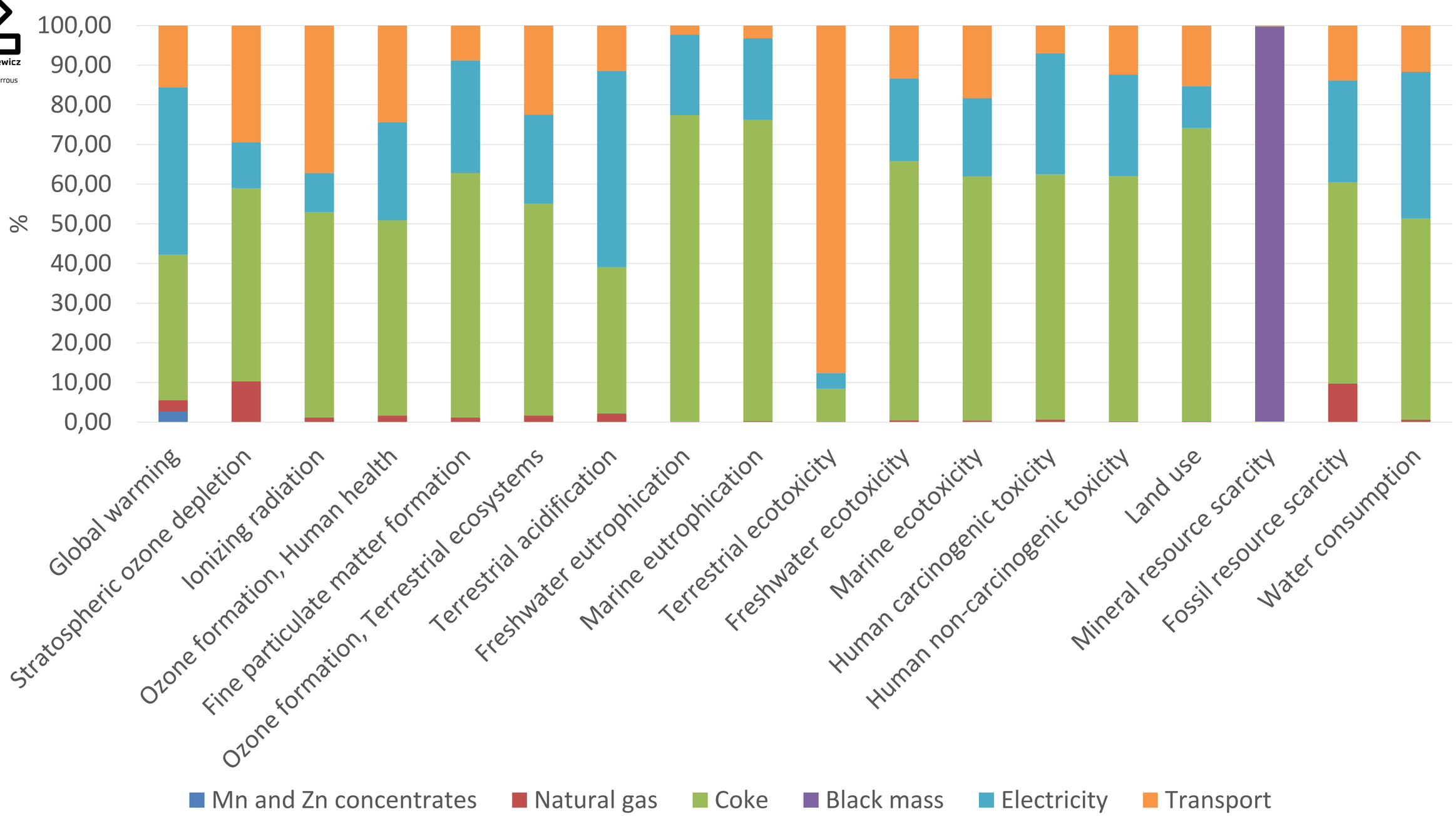

Results - normalization

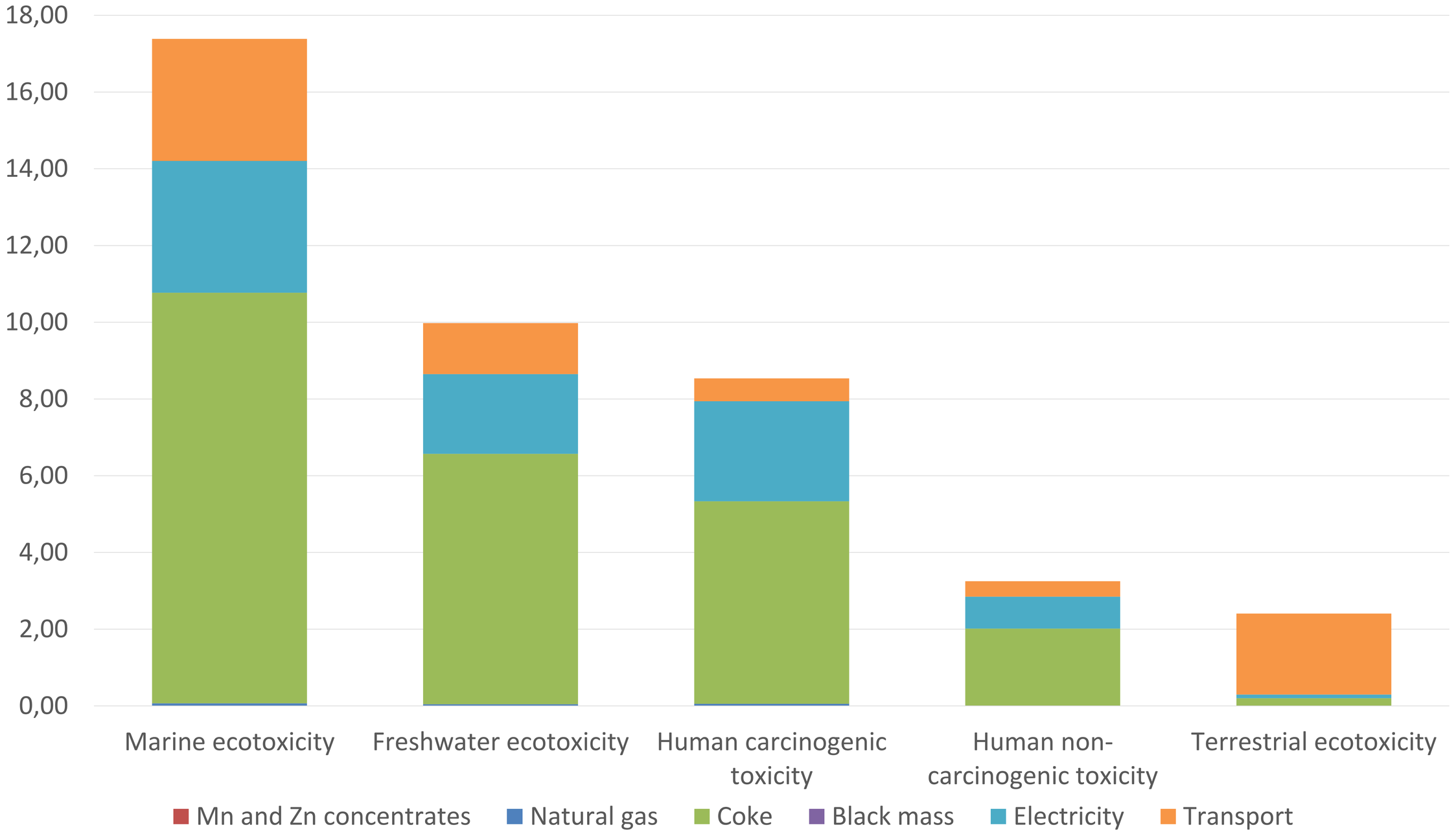

Results – endpoint, damage assessment

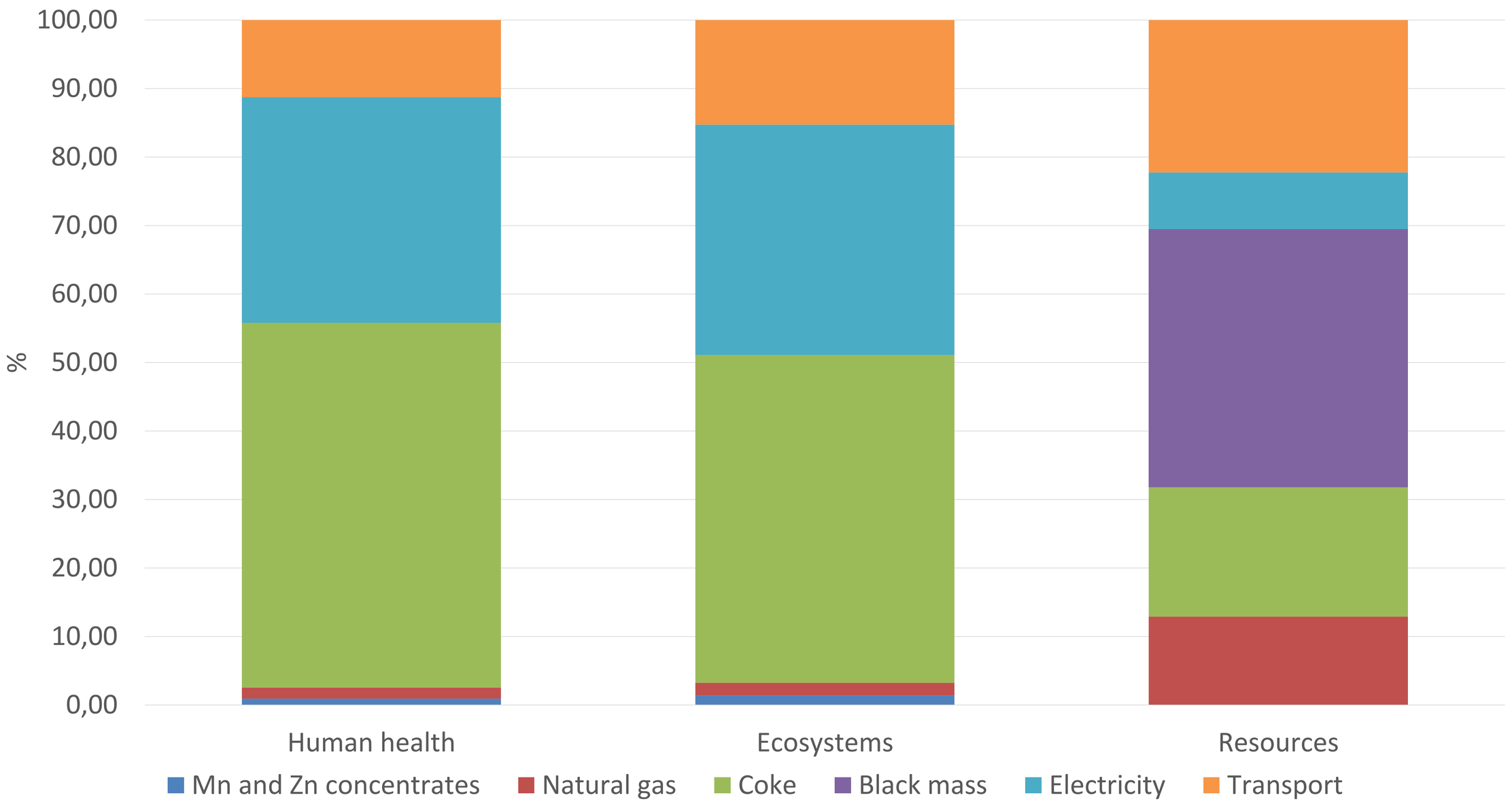

Results – endpoint, single score

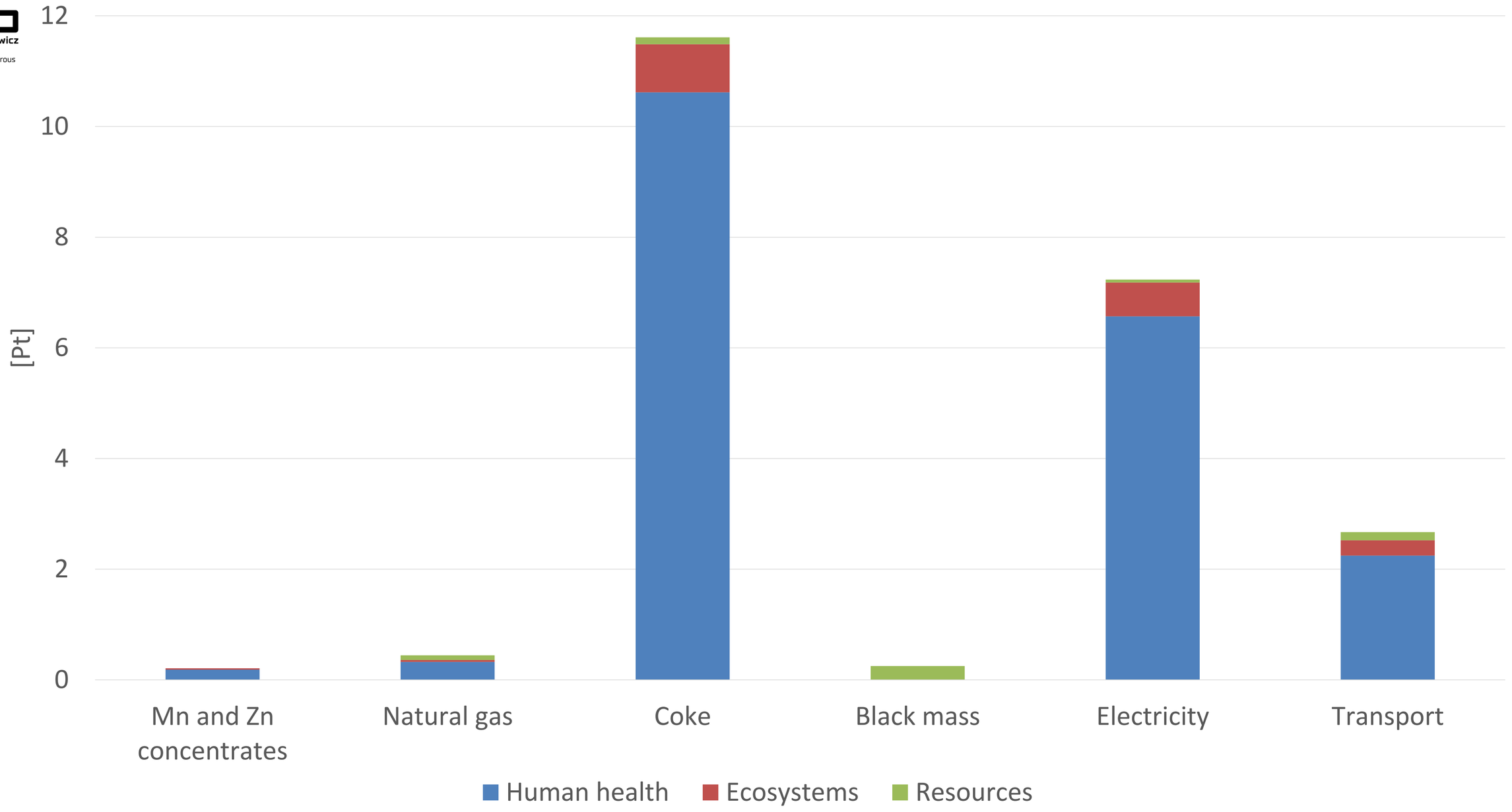

Results – carbon footprint

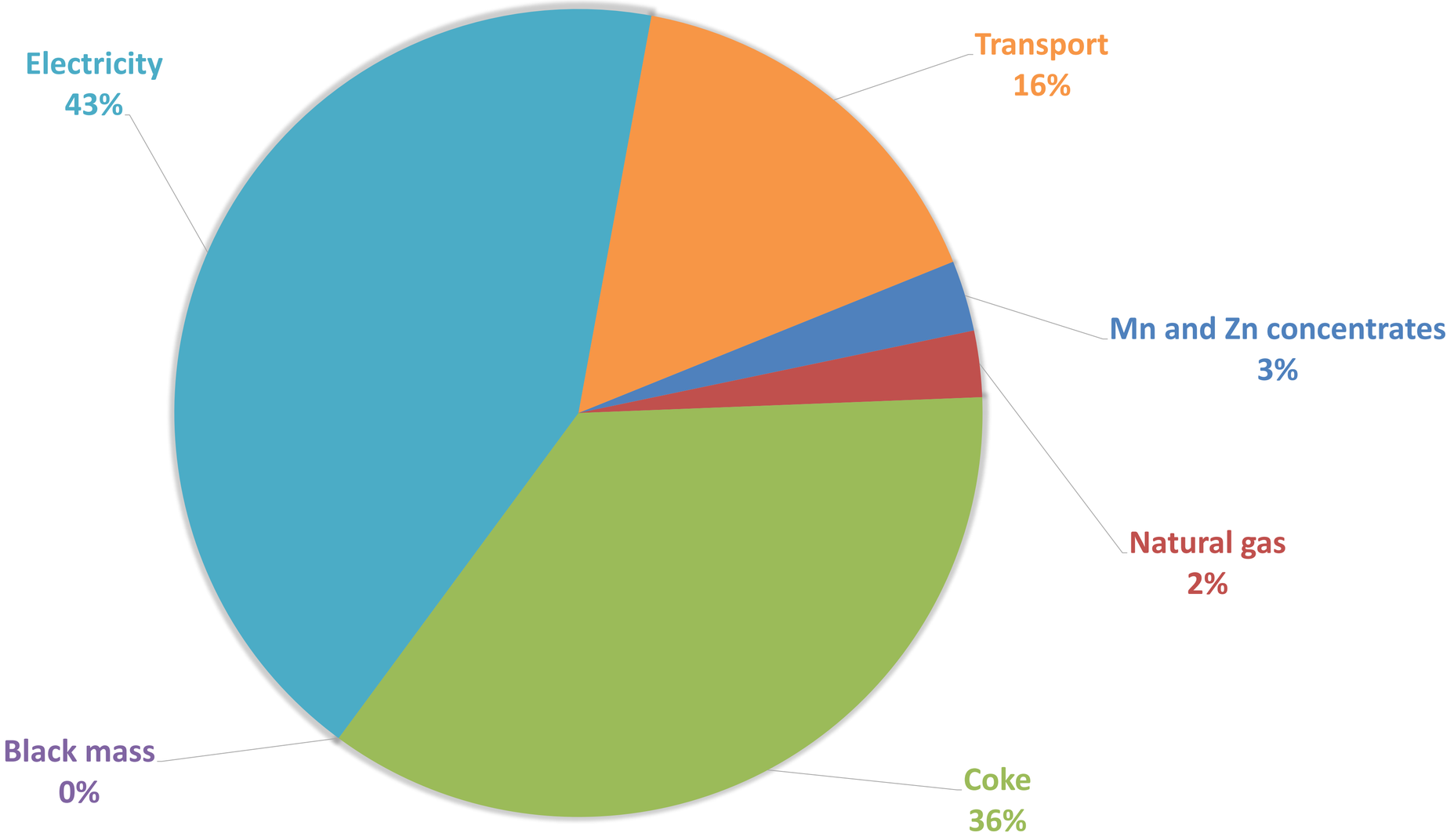

Summary

- At Łukasiewicz - IMN, a new technology has been developed for the production of commercial products from fractions generated from the processing of zinc-carbon and alkaline batteries, in particular, the processing of black mass in a pyrometallurgical process of roasting in a rotary kiln into useful (commercial) products: zinc dust and manganese concentrate containing MnO and Mn_3O_4, suitable, for example, for use as substrates for the production of ferro-manganese.
- The products are Mn concentrate containing 53-63% Mn and 0.1-3.6% Zn with a yield of approximately 98% Mn and Zn dust containing 52-65% Zn and 0.8-2.2% Mn with a yield of approximately 99% Zn.
- The developed technology is waste-free, the only pollutants can be found in th proces gases.
- The goal of this study was to evaluate the environmental impact of the processing of black mass obtained from waste zinc batteries in a process developed at Łukasiewicz – IMN.

Summary

- The analysis was performed with SimaPro software and Ecoinvent 3 database.
- The highest environmental loads can be observed for the production of coke used as a reducer for the process. This means coke has the highest influence on the environment, in particular on human healts. Research is being conducted to develop the feasibility of using char from pyrolysis of multi-material waste as an additive or substitute for coke in this process. This way, this negative impact could be at least partially reduced.
- The second most significant source of environmental loads is the production of electricity. In Poland, electricity is almost exclusively produced from the combustion of fossil fuels (hard coal). In recent years an improvement in this field could be observed, i.e. due to the incentive system for the construction of domestic solar power plants.
- The third most important source of pollution is transport, which also is fueled by combustion of fossil fuels. Undoubtedly, the use of electric or hydrogen vehicles would have a positive impact on this output.

Thank you!

katarzyna.klejnowska@imn.lukasiewicz.gov.pl

Łukasiewicz
Institute
of Non-Ferrous
Metals